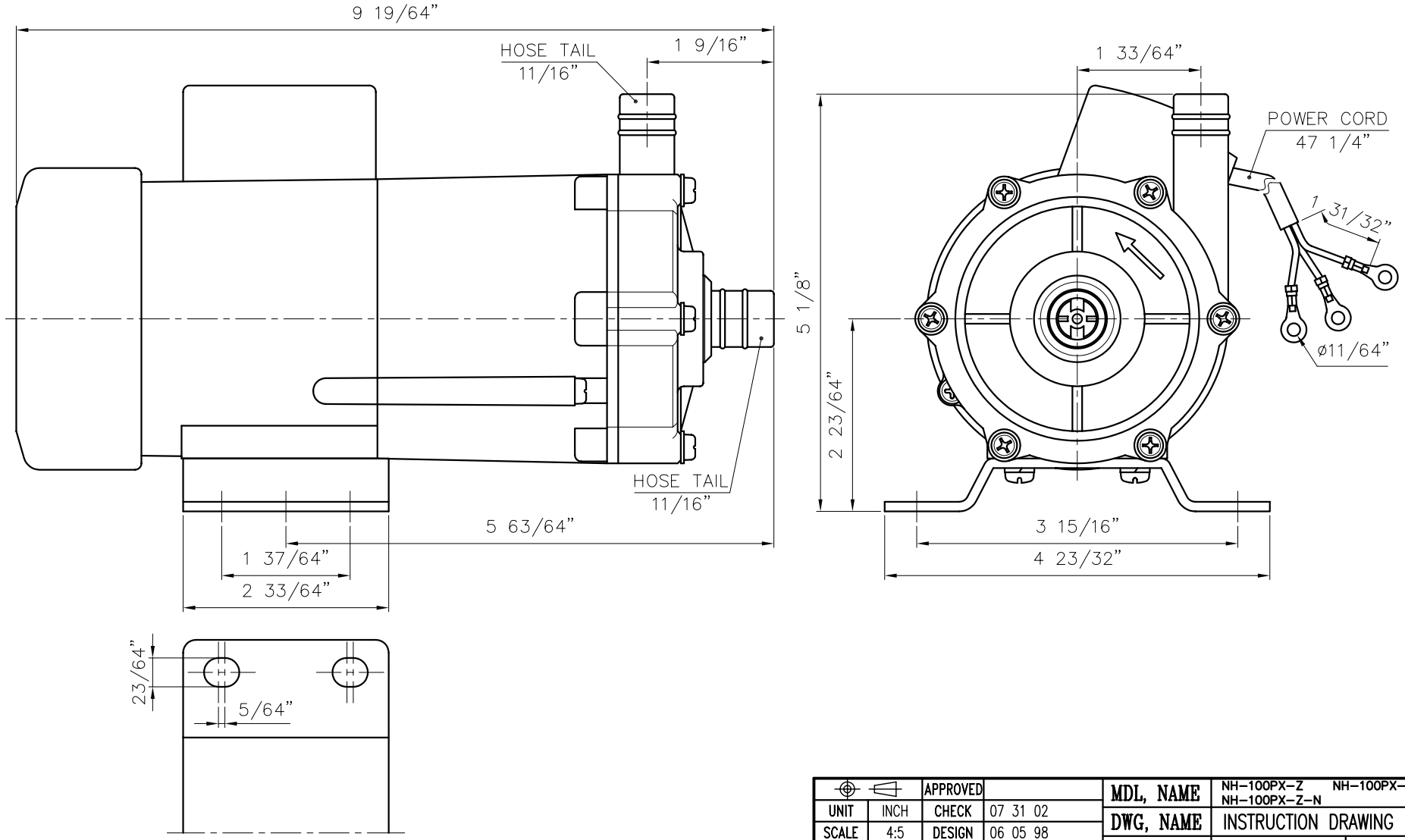

DIMENSION TOLERANCE : JIS 16 CLASS

		APPROVED		MDL, NAME	NH-100PX-Z NH-100PX-Z-F NH-100PX-Z-N	
UNIT	INCH	CHECK	07 31 02	DWG, NAME	INSTRUCTION DRAWING	
SCALE	4:5	DESIGN	06 05 98			
EDITION	3	DR.BY	07 31 02 BECKY	DWG, NO.	B1101232	A3

TPW
HONG YUAN

PAN WORLD CO.,LTD.
パンワールド 株式会社